The Lightweight Steel Frame House Construction Handbook

Chapter One

Getting Started

Introduction

Lightweight steel framing is increasing in popularity amongst homebuilders. Framing techniques and details are now available that largely eliminate the need for engineering services. **The purpose of this Handbook is to provide the builder with general design guidelines, common practices and insights concerning successful lightweight steel construction. This Handbook describes a method for framing the floors and walls of single family residential buildings and other small buildings using lightweight steel members. This Handbook can be used only in conjunction with lightweight steel framing (LSF) products evaluated under the CCMC Technical Guide for Lightweight Steel Framing Components**. Engineering design services are required for all other LSF construction applications.

Code Compliance and CCMC Reports

The Canadian Construction and Material Centre (CCMC), a part of the National Research Council of Canada's Institute for Research in Construction, offers the construction industry a national evaluation service for new and innovative materials, products and services in all types of construction.

A CCMC evaluation is an impartial, technical opinion on the suitability of a product for its intended use, usually with respect to the requirements of the National Building Code of Canada and, in many cases to provincial codes including the Ontario Building Code. CCMC ensures that its evaluations are based on the latest technical research and expertise. CCMC Reports and Listings are utilized throughout the country by building officials and other authorities as a basis for determining the acceptability of products.

Please check with your local building official with respect to the acceptability of CCMC reports in establishing Code compliance.

The prescriptive span and height tables, along with floor and wall opening details contained in this document have been evaluated by CCMC for conformance to Part 9 of the NBCC 1995. Therefore, construction using CCMC certified framing elements in accordance with this Handbook will conform to Part 9 of the NBCC 1995.

Lightweight Steel Framing: An Alternative Framing System

Generally speaking, the process of building lightweight steel framed homes does not differ significantly from the methods used for wood framed construction. Walls, floors and ceilings are built by a repetition of light frame members. Typical wood framed truss assemblies or built-up wood roof systems can be used directly over steel frame walls and floors. Steel solutions for these systems exist, but require the input of a design professional and are beyond the scope of this document.

Despite the similarities between LSF and wood framing, there are important differences that must be understood and considered during design and construction. Confidently addressing these differences will allow for trouble-free construction. Specific troubleshooting issues are addressed in Chapter 9.

Building Science Insight: Advantages of Steel Framing

Advantages of Lightweight Steel Framing (LSF)

Steel framing offers a number of advantages that increase design and construction flexibility over traditional framing materials.

Member length: Steel joists can be manufactured to any practical length, thereby enabling the entire width of the typical residential building to be spanned continuously. This eliminates the need for interior lap joints, thus speeding up construction and reducing potential for cracking or roughness in floor finishes over interior supports. Member length is limited only by shipping and transportation restrictions.

High strength to weight ratio: LSF members are lighter per unit length than traditional framing members. LSF is easier for framers to lift on the job site. This may lead to faster and less costly building construction with fewer lifting-related injuries.

Member thickness: The inherent strength of cold formed steel provides a great deal of flexibility in the layout of framing members. Due to the low self-weight per unit length and the strength of steel, steel joists can span longer distances than traditional framing materials of the same depth and width. By increasing the base steel thickness, the strength and therefore the design span of the framing member is increased. In some cases these longer spans allow the designer to eliminate interior supporting beams or walls. This means more open and unobstructed interior spaces for the end user and potentially lower construction costs for the builder.

Moisture-related problems: Steel does not absorb water, so the moisture-related problems of warping, shrinking and twisting that are common to more traditional framing products are not a problem with LSF. The use of LSF can drastically reduce or eliminate the incidence of squeaking subfloors, warped walls, nail pops and cracked drywall since these problems are generally caused by the moisture-related movement of the framing. To correct these defects requires costly post-construction repair work, and so the absence of these problems in a LSF building illustrates another cost-saving benefit of LSF construction. Also, since steel does not warp and twist due to moisture, LSF members are delivered to the site straight and true, eliminating the time needed to sort and crown traditional framing members

Vermin and rot resistance: Steel framing is immune to termite attack or damage from insects, rodents, or other vermin. As well, since steel framing does not absorb moisture, it does not support the growth of destructive, parasitic and biohazardous moulds and fungi.

Electrical and plumbing services: Steel framing is typically supplied with pre-punched holes in the webs of floor joists and wall studs. The installation of electrical and plumbing services is quickly and easily accomplished when the pre-punched holes are used for running these services. The Canadian Standards Association (CSA) has approved plastic grommets that snap into these pre-punched holes, thereby allowing the use of the standard plastic coated wiring familiar to residential builders, rather than the more expensive metal-armoured cable used in commercial and industrial applications. Similar grommets are used to insulate the plumbing from the steel framing to prevent any chaffing, vibration, or electrolytic action between the LSF and pipes.

Sagging: Steel members provide the strength and stiffness to accommodate heavy floor toppings (loads) without long-term sagging or creep.

Non-combustible construction: Steel is non-combustible and therefore does not contribute fuel to a fire. LSF has long been a popular choice for non-combustible construction in commercial applications because of both the non-combustible and durable nature of steel framing.

Indoor air quality: Steel is an inert building material that does not emit fumes, gases, vapours or support the growth of toxic moulds and fungi. The water-based lubricants used during the roll forming process dissipate in the open environment present during the framing stage.

Environmental impact: Steel is the only construction material that is 100% recyclable without degradation in material properties. Steel framing has a recycled steel content not less than 30% and can be as much as 100%.

Working with Other Trades

Construction of a new home requires the co-ordination of various trades. Later chapters in this book describe specifically how other trades may be affected by working on an LSF house. As a general rule, let the trade know beforehand that they will be working on a steel framed house and what additional tools and accessories may be required.

During the design process remember to configure members which promote arrangements for ease of installing wiring, insulation and services.

Common Practices

The framing methods presented in this Handbook are a sample of those used in current practice and as such, are not necessarily intended to represent the best or only methods available. Other details and engineered designs are available that are equally suitable and may be more efficient for particular building geometries. For additional framing details, refer to the CSSBI publication "Low Rise Residential Construction Details".

In-line Framing

When supported by steel framed walls in accordance with this manual, a steel framed floor shall be constructed with floor joists in-line with loadbearing studs located below the joists. Generally, the maximum distance between the centre lines of the joist and the stud shall be limited in accordance with Figure 1.1.

Figure 1.1

In-line Framing Tolerance Limits

To qualify as "in-line", each joist, rafter, truss, and structural wall stud must be aligned vertically, according to the limits depicted here. The alignment tolerance is not required when a structural load distribution member is specified in accordance with an approved design.

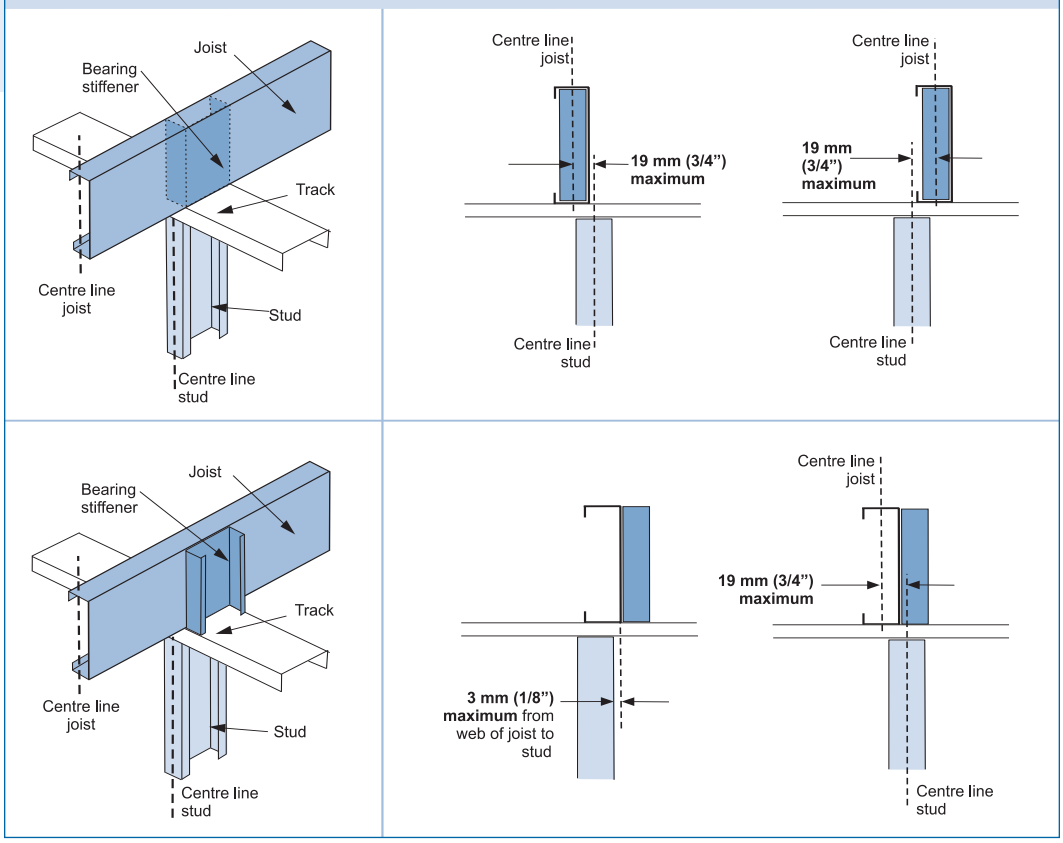

Scope and Limitations of this Handbook

This manual applies to the construction of lightweight steel framed walls and floors for detached single family dwellings and multi-family row houses up to three storeys in height that would fall within the scope of Part 9 of the National Building Code of Canada (NBCC 1995). For applications outside this scope, or for building projects not constructed under CCMC certifications, design and construction must conform to the requirements of NBCC Part 4. Involvement of a design professional is required for all design and construction not specifically described in this manual. Consult your local building official for advice in this area.

The CSSBI does not assume any professional liability for the adequacy of these provisions. Professional advice should be sought if there is some question of the appropriate application.

The methods identified in this manual apply to buildings that conform to the application limits identified in Figure 1.2. This Handbook includes Member Selection Tables (Appendix A).

Figure 1.2
Applicability Limits

Applicability Limits

Application	**Limitation** metric (imperial)
Building Area	600 m^2 (6460 sq ft) maximum
Number of Stories	3 storey maximum
Building width	13.4 m (40 ft) maximum from eave to eave including 0.6 m (24 in) x 2 overhang
Building Length	18.3 m (60 ft) maximum
Hourly Wind Pressure, q (1/30)	Up to 0.6 kPa (12.5 psf)
Specified Roof Snow Load	Up to 2.5 kPa (52.2 psf)
Seismic Parameters	Z_a V Z_z 1 0.05 0 2 0.05 1 4 0.10 2

NOTE: Only metric values are official, imperial values are for convenience only.

Manufacturing Standards

Lightweight steel framing members are manufactured in Canada to the requirements of ASTM C645 and ASTM C955. These standards specify framing member minimum dimensions and establishes material and structural requirements for both loadbearing and non-loadbearing members. To ensure a high level of production quality, CSSBI manufacturers also follow the CSSBI publication Quality Policy Manual for the Fabrication of Residential Lightgauge Steel Framing.

The design of LSF members is well refined and has benefited from many years of research and development. The design of all cold formed steel structural products in Canada, including loadbearing steel framing members described in this document, must conform to the requirements of CSA Standard S136 North American Specification for the Design of Cold- Formed Steel Structural Members, as referenced by the NBCC.

Loadbearing LSF members must be cold formed to shape from structural quality sheet steel complying with the requirements of one of the following material specifications:

a) ASTM A653/A653M, Specification for Steel Sheet, Zinc-Coated (Galvanized) or Zinc-Iron Alloy-Coated (Galvannealed) by the Hot-Dip Process; or
b) ASTM A792/A792M, Specification for Steel Sheet, 55% Aluminum-Zinc Alloy-Coated by the Hot-Dip Process.

The minimum yield strength of all loadbearing steel members and connected accessories with a design thickness 1.146 mm (0.0451 in) or less shall be 230 MPa (33,000 psi). For design thicknesses 1.438 mm (0.0566 in) and greater, a minimum yield strength of 340 MPa (50,000 psi) is specified. For framing members supplied as part of a CCMC certified building project, each loadbearing steel framing member will have a legible label, stamp or embossment with the following information as a minimum:

1. Manufacturer's identification, and
2. CCMC certification number.

The manufacturer may also include additional information such as a member size and material designation.

LSF members and accessories must have a minimum metallic coating complying with Figure 1.3. Other metallic coatings are permitted provided it can be demonstrated they have a corrosion resistance that is equal to or greater than the corresponding coatings listed and provide protection at cut edges, scratches, etc. by cathodic sacrificial protection.

Figure 1.3

Minimum Metallic Coating Requirements

Minimum Metallic Coating Requirements		
Steel Component	**Reference ASTM Standard**	
	A653/ A653M Galvanized	**A792 / A792M Aluminum-Zinc Alloy**
Loadbearing	G60 / Z180	AZ50 / AZM150
Non-Loadbearing	G40 / Z120	AZ50 / AZM150

Similar to traditional framing materials, LSF members shall be located within the building envelope and adequately protected from direct contact with moisture from the ground or the outdoor environment. The coating designations shown in Figure 1.3 assume normal exposure conditions and construction practices. It is recommended that the aluminum-zinc alloy coated steel not be used in contact with fresh concrete.

Codes and Regulations

All construction must conform to the requirements of local building codes, or in their absence, to the requirements of the National Building Code of Canada. All construction must be acceptable to the authority having jurisdiction.

Non-loadbearing lightweight steel framing is covered by Section 9.24 of the National Building Code of Canada 1995.

Loadbearing lightweight steel framing as discussed in this Handbook has been evaluated by the Canadian Construction Materials Centre for conformance to the provisions in Part 9 of the National Building Code of Canada, as permitted under NBCC 1995 Section 2.5 "*Equivalents*"

The design of member capacities for structural members are in accordance with Part 4 of the NBCC.

Framing Members

Lightweight steel framing members are manufactured using a cold forming process that shapes sheet steel into a "C" shape profile, as shown in Figure 1.4. Stringent profile and length tolerances are typical of products manufactured from steel. The manufacturer of the steel framing members may be consulted for details.

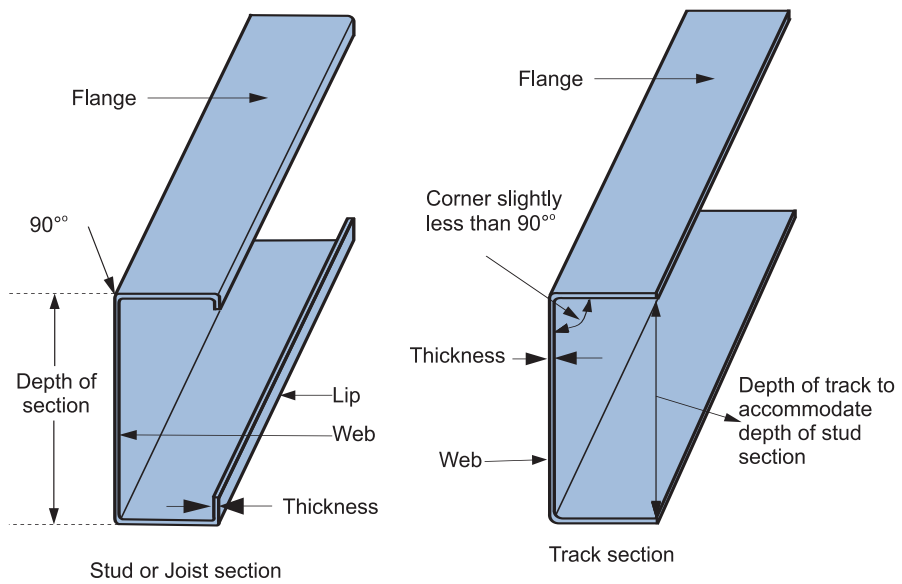

Figure 1.4

Framing Member Cross-Sections

The stud and joist sections have flanges stiffened with a lip to increase member strength (Figure 1.4). Track sections are made with unstiffened flanges that are angled slightly inward to temporarily hold the studs in place before being secured with a fastener, and also to allow the studs to bear directly on the track web. Figure 1.5 illustrates cross-sections of some of the various configurations of stud and track that may be assembled to create built-up sections for headers, jambs, and lintels.

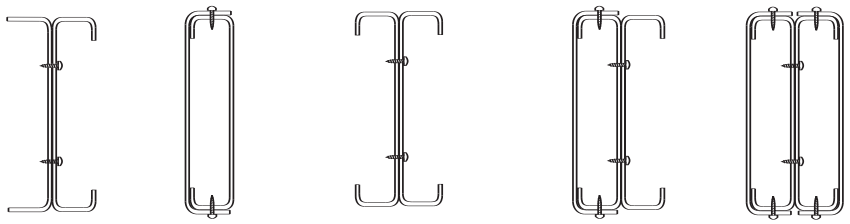

These combinations must be engineered for built-up beams. The diagrams illustrate how to combine various members.

Figure 1.5

Built-up Sections

Standard Loadbearing Members

The standard loadbearing residential steel framing members used in Canada are listed in Figure 1.6. These sections, spaced up to 610 mm (24 in) on centre (o.c.), can be used for a variety of floor and wall loading conditions. The Member Selection Tables (Appendix A) and LSF manufacturers' catalogues should be consulted for section properties and availability. Non-standard sections are also available or can be manufactured by special request, but standard sizes are recommended to ensure ready supply and to enable standardized load tables. A list of LSF manufacturers is available from the CSSBI.

Figure 1.6

Standard Loadbearing Member Sizes

Standard Loadbearing Member Sizes (nominal dimensions)				
Commonly Used Application	**Web Depth mm (in)**	**Flange Width mm (in)**	**Design Thickness mm (in)**	**MinimumThickness mm (in)**
Studs (nominal 2 x 4)	92.1 (3-5/8) 92.1 (3-5/8) 92.1 (3-5/8)	41.3 (1-5/8) 41.3 (1-5/8) 41.3 (1-5/8)	0.879 (0.0346) 1.146 (0.0451) 1.438 (0.0566)	0.836 (0.0329) 1.087 (0.0428) 1.367 (0.0538)
Studs, Headers & Joists (nominal 2 x 6)	152 (6) 152 (6) 152 (6)	41.3 (1-5/8) 41.3 (1-5/8) 41.3 (1-5/8)	0.879 (0.0346) 1.146 (0.0451) 1.438 (0.0566)	0.836 (0.0329) 1.087 (0.0428) 1.367 (0.0538)
Joists, Headers & Lintels (nominal 2 x 8)	203 (8) 203 (8) 203 (8) 203 (8)	41.3 (1-5/8) 41.3 (1-5/8) 41.3 (1-5/8) 41.3 (1-5/8)	0.879 (0.0346) 1.146 (0.0451) 1.438 (0.0566) 1.811 (0.0713)	0.836 (0.0329) 1.087 (0.0428) 1.367 (0.0538) 1.720 (0.0677)
Joists & Headers (Nominal 2 x 10)	254 (10) 254 (10) 254 (10)	41.3 (1-5/8) 41.3 (1-5/8) 41.3 (1-5/8)	1.146 (0.0451) 1.438 (0.0566) 1.811 (0.0713)	1.087 (0.0428) 1.367 (0.0538) 1.720 (0.0677)
Joists & Headers (Nominal 2 x 12)	305 (12) 305 (12) 305 (12)	41.3 (1-5/8) 41.3 (1-5/8) 41.3 (1-5/8)	1.146 (0.0451) 1.438 (0.0566) 1.811 (0.0713)	1.087 (0.0428) 1.367 (0.0538) 1.720 (0.0677)

Standard Non-loadbearing Members

The standard non-loadbearing framing members sizes commonly used in Canada are listed in Figure 1.7. Any loadbearing stud may also be used in a non-loadbearing application; however, non-loadbearing members (studs or track) may never be used in a loadbearing (axial and/or wind loading) applications.

Figure 1.7

Standard Non-Loadbearing Member Sizes

Standard Non-Loadbearing Member Sizes (nominal dimensions)			
Commonly Used Application	**Web Depth mm (in)**	**Flange Width mm (in)**	**Minimum Uncoated Thickness mm (in)**
Interior Bulkhead Construction	41.3 (1-5/8)	31.8 (1-1/4)	0.455 (0.0179)
Miscellaneous Interior Framing	63.5 (2-1/2)	31.8 (1-1/4)	0.455 (0.0179)
Interior Non-Loadbearing Studs	92.1 (3-5/8 or 3-1/2) 152 (6)	31.8 (1-1/4) 31.8 (1-1/4)	0.455 (0.0179) 0.455 (0.0179)

Standard Track Sections

Standard track sections (see Figure 1.4) are available to accommodate all sizes of joists and studs. It is important to note that track sections are not designed to carry structural loads without the in-line placement of loadbearing framing members. Engineered design is necessary when in-line framing is not used.

Built-up Sections

Track sections can be combined with C- sections to form built-up sections (see Figure 1.5) to use as floor beams, headers, lintels, trimmers, jamb or jack studs, and at other locations requiring extra strength. All built-up sections should be made from members of equal thickness, and fastened together at least every 610 mm (24 in) o.c. The sections used in these built-up members must be continuous lengths, unless their purpose is non-structural (i.e. closing off rough openings).

Tables are shown in this Handbook which provide the capacity of several types of built-up members most commonly used in the construction of steel framed homes. Other configurations may be assembled, but their capacity must be determined by a design professional in accordance with CSA Standard S136.

Accessories

Manufacturers of lightweight steel framing also produce a range of accessories required for residential construction, including flat strap bridging, web stiffeners, and clip angles.

Horizontal Wall Bridging

Horizontal flat strap bridging is used to provide rotational restraint for loadbearing studs and is attached to both faces of the stud (see Figure 1.8). Flat strap bridging is at least 38 mm wide and 0.879 mm thick (1-1/2 x 0.0346 in) sheet steel material. The design of the stud will dictate the maximum spacing of these straps as shown in the Member Selection Tables (Appendix A) or the manufacturers' catalogues. If exterior structural sheathing (e.g. OSB or plywood attached directly to the stud) is used, the flat strap bridging is not needed on that side of the stud, however it still must be installed on the interior stud flange.

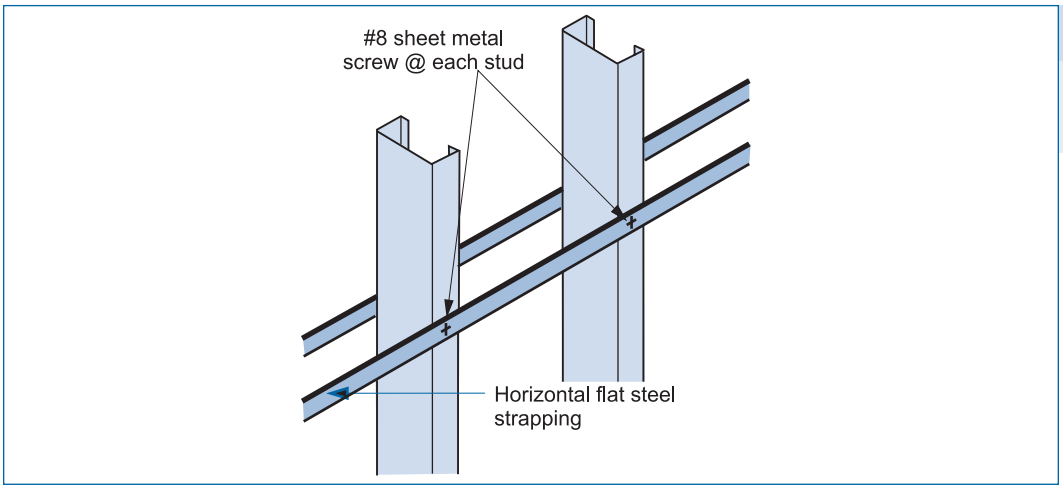

Figure 1.8

Horizontal Flat Strap Wall Bridging

Web Stiffeners

A web stiffener (as shown in Figure 1.9) is used in all locations where a concentrated load acts on a floor joist or track section. A web stiffener is a short piece of loadbearing stud with a thickness at least 0.879 mm (0.0346 in). The stiffener has a 38 mm (1-1/2 in) wide flange to allow it to fit within the

41 mm (1-5/8 in) flanges of the joist. The minimum length of the stiffener shall be the depth of the member being stiffened minus 9 mm (3/8 in). Stiffeners can be installed on either side of the joist web, fastened to the joist with at least 3 - #8 screws. The LSF fabricator normally supplies these stiffeners as part of the floor joist package.

Figure 1.9

Web Stiffener

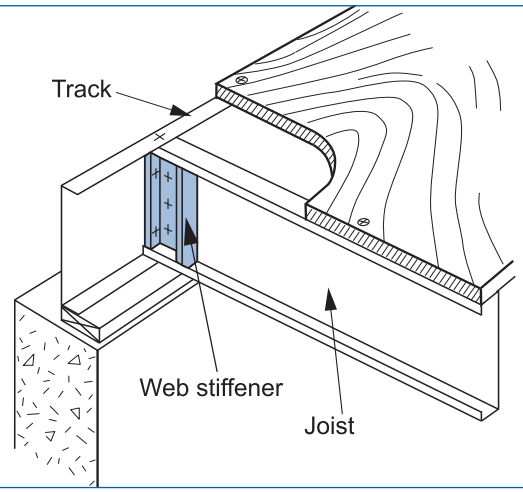

Clip Angles

Clip angles are needed to connect floor joists to headers, lintels to king studs, or headers to trimmers (see Figure 1.10). Clip angles shall be at least 1.438 mm (0.0566 in) thick and the length must be no less than the depth of the joist minus 25 mm (1 in). The number of screws connecting the clip angle depends on the size of the members being connected.

Figure 1.10

Clip Angle

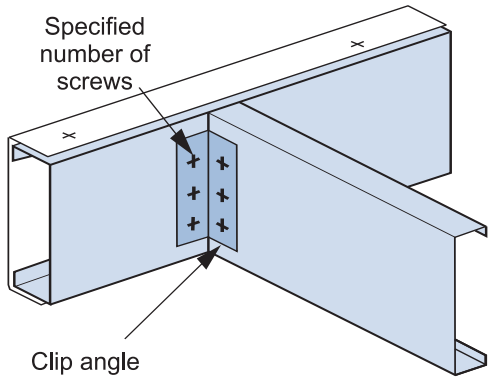

Fasteners

Screws are used almost exclusively in lightweight steel framing. A self-drilling sheet metal screw (SMS) can drill the hole and securely fasten materials together. These screws come in a variety of sizes and head types to fit a full range of requirements. In special circumstances, or for highly repetitive installations, specialized tools and other forms of mechanical fasteners such as pneumatic pins or welding may be more economical. The LSF fabricator, fastener supplier or tool supplier can provide additional information. The connections in this guide are limited to screw fastening only.

Note that the #8 screws often specified in this Handbook are minimums and that larger screws may be needed for thicker members.

Screw Head Types

Self-drilling screws are manufactured in a variety of head configurations to meet specific installation needs and installers' preferences. The most common driving recesses for the screw head are the No. 2 Phillips and No. 2 Robertson. The following list describes the various types of screw heads available, which are illustrated in Figure 1.11.

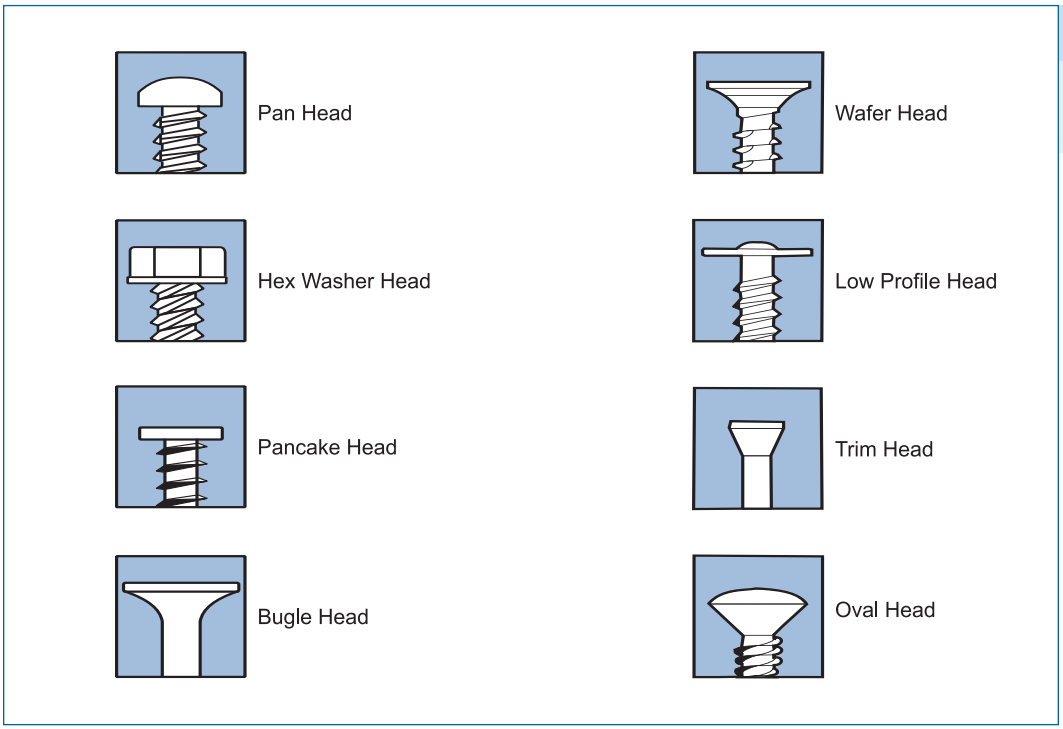

Figure 1.11

Screw Head Types

Pan Head: This head configuration generally fastens studs to track, connects steel bridging, strapping or furring channels to studs or joists, and steel door frames to studs.

Hex Washer Head: This head style is commonly used for fastening thicker framing components and accessories, exterior connections and connections that do not interfere with finishes. The washer face provides a bearing surface for the driver socket, assuring greater stability during driving. The 8 mm (5/16 in) size head is most common.

Pancake Head: An extremely low profile head commonly used for attaching metal lath to steel framing or in areas where rigid finish material is to be installed over the tops of the screws. These are also sometimes referred to as wafer head screws.

Bugle Head: This head style is designed to slightly dimple gypsum wallboard, plywood sheathing or other finishing materials without crushing the material or tearing the surface. It leaves a flat, smooth surface for easy finishing.

Wafer Head: Larger than the flat or bugle head, the wafer head is used for connecting soft material to steel studs. The large head provides an ample surface yet sits flush to achieve a clean, finished appearance.

Low-Profile Head: This head style is commonly used for connecting LSF components when rigid finishing materials are to be used

Trim Head: Used for fastening wood trim or thicker dense material to steel studs. The small head sinks into the trim material, allowing easy finishing with minimal disturbance of the material surface.

Oval Head: Used when an accessory that will be attached to the framing has oversized holes (e.g. electrical boxes) and for attaching cabinets and brackets to framing.

Screw Point Type and Thread Configuration

There are two common screw point designations used in residential steel framing: sharp point and drill point (see Figure 1.12). Sharp points are for steels up to 0.879 mm (0.0346 in) thick and may have a sharp needle or piercing point similar to that currently used for sheet metal in HVAC systems. Drill points are designated for individual sheets up to 12.7 mm (0.5 in) thick and have a shorter, fluted tip specifically designed for drilling.

Figure 1.12

Sharp Point and Drill Point

There are two main types of screws used for lightweight steel framing, sharp point and drill point. Drill point is often referred to as a sheet metal screw (SMS).

Sharp Point
Sharp point screws can be used on steel up to 0.879 mm (0.0346 in) thick

Drill point or SMS
SMS should be used for members thicker than 0.879 mm (0.0346 in)

Depending on the thickness of the material being connected, the threads along the shank are held back from the point of the screw to prevent the threads from engaging the steel until the drilling process is complete. This prevents over-drilling the first ply or stripping the threads after partial penetration. At the other end of the screw, the threads do not continue to the screw head. When connecting wood or other rigid material to steel, this allows the screw to draw the plies together with minimal lift-up of the wood or rigid material.

Minimum Screw Sizes

Most connections in residential steel framing are required to carry loads dictated by the structural design of the building. Figure 1.13 specifies the minimum screw size depending on the total sheet thickness being connected. Connections of non-structural elements such as drywall, trim, cabinets, and insulating sheathings can use any appropriate fastener type or size.

Figure 1.13

Screw Sizes for Steel-to-Steel Connections

Screw Sizes for Steel-to-Steel Connections			
Screw Size	**Point Type**	**Nominal Screw Diameter mm (in)**	**Total Thickness of Connected Steel mm (in)**
#8	#2 (sharp point)	4.2 (0.164)	0.879 to 2.54 (0.0346 to 0.100)
#8	#3 (drill point)	4.2 (0.164)	2.79 to 3.56 (0.100 to 0.140)
#10	#3 (drill point)	4.8 (0.190)	2.79 to 4.45 (0.110 to 0.175)
#12	#3 (drill point)	5.5 (0.216)	2.29 to 5.33 (0.090 to 0.210)

Tools

Many of the procedures and tools used in framing with LSF members are similar to those used with wood. In addition to the tools normally used in wood frame construction, those required for LSF construction are listed below.

- 184 mm (14 in) chop saw c/w abrasive saw wheels (metal cutting wheels with tooth pattern also available)
- variable speed, reversible (VSR) screw gun with clutch (2500 rpm max)
- 8 mm (5/16 in) hex driver tip
- #2 Phillips and #2 Robertson screw tips
- vice grip clamps - 11R
- vice grip clamps - 6R
- metal snips
- felt tip permanent markers
- minimum 1.2 m (4 ft) magnetic level, 1.8 m (6 ft) preferred

Optional tools might also include:

- power shear or nibbler
- metal hole hand punch

The tools used most often are metal snips, VSR screw guns and circular or chop saws. Ensure that these are in good working order before beginning the project.

Ordering Material and Site Storage

House plans utilizing wood framing can be converted to steel framing using this manual and the Member Selection Tables (Appendix A). As well, LSF fabricators may be able to provide guidance on converting a wood design to steel. Engineering services may be required for aspects of the construction falling outside the scope of this manual.

Local LSF fabricator representatives or building supply distributors who carry steel framing components can provide current information on framing availability, pricing, and local applications. As well, some fabricators may provide guidance for design, on-site training, and proper tool selection and use.

Colour Coding

The Canadian manufacturers of residential steel framing colour code one end of the loadbearing section (joists and studs) so that the thickness of the steel can easily be identified in the field. The standard base steel nominal design thicknesses and corresponding colour codes are shown in Figure 1.14. Note that these are the common colours, but others are also used. To avoid confusion, the preferred method of ordering is by decimal thickness (mm or inches).

Figure 1.14

Colour Codes for Standard Thicknesses

Colour Codes for Standard Thicknesses		
Colour	**Minimum Thickness***	
	mm	in
White	0.836	0.0329
Yellow	1.087	0.0428
Green	1.367	0.0538
Orange	1.720	0.0677
Red	2.454	0.0966

* Note: The minimum thickness of 95% of the design thickness.

Cut Lists and On-Site Cutting

Pre-cut steel framing members delivered from the LSF fabricator make the construction of stick-built steel houses somewhat different from those framed out of wood. Pre-planning and proper assembly become particularly important. Pre-planning establishes the framing member thicknesses and lengths that become a

cut list, which is used to order from the LSF fabricator. The LSF fabricator normally provides most cut-to-length studs, joists and accessories. Members of varying lengths are then carefully assembled on-site as per the drawings.

Lead-time for delivery of cut-to-length steel sections is usually very short: consult the LSF manufacturer for an exact schedule. Some standard sizes and lengths may be stocked by the LSF manufacturer. Typically, lengths under 1.2 m (48 in) are cut on-site. Check with the LSF manufacturer for their cutting practice. Manufacturers may pre-cut sections for web stiffeners, bridging, lintels, and cripple studs used around windows and doors. Track is normally sold in standard lengths, and can be ordered in special lengths for specific residential applications. The standard track lengths used in residential construction are different than those commonly used in commercial construction to accommodate structural applications where splicing is not allowed.

Cutting lightweight steel non-loadbearing studs can easily be done with metal snips. For occasional cutting of thicker loadbearing studs or joists, electric shears or nibblers are convenient. When a considerable amount of field cutting is necessary, a chop saw with an abrasive blade speeds up the construction process.

Framing Overview

There are three basic ways to frame a house: stick-built on-site (platform or balloon framing), panelized, or modular construction.

Each of these methods is used to build homes across the country today, but stick-built construction remains the most popular method. For multiple-unit projects or projects utilizing a repetitive design, panelization (prefabrication) may be used in a cost-effective manner. Wall, floor and roof panels that are pre-assembled in a factory can be shipped directly to the construction site and quickly erected. Manufactured housing, where an entire home or construction unit is assembled in a factory, may be employed to good advantage, particularly when the unit is required in an area not well serviced by the residential construction industry (e.g. remote or undeveloped locations).

In-line Framing

When supported by steel framed walls in accordance with this manual, a steel framed floor shall be constructed with floor joists in-line with loadbearing studs located below the joists, within the lilmits set out in Figure 1.1.

Screw Connections

Minimum screw sizes for steel-to-steel connections shall comply with Figure 1.13. Self-drilling sheet metal screws (SMS) are required when the total thickness of steel exceeds 0.879 mm (0.0346 in). Sharp point screws are acceptable for steel thicknesses of 0.879 mm (0.0346 in) or less. The minimum corrosion protection for screws shall be 0.008 mm (0.0003 in) of zinc or equivalent. Other types of connectors can be used with LSF such as power actuated pins, metal press joining or welding. For specific requirements for these alternative connectors, consult a design professional.

Requirements for Screwed Connections

The size and number of screws required for a sound connection are specified in the appropriate sections of this manual. The following requirements also apply:

- Head Styles, Threads and Point Types: Application conditions and manufacturer recommendations shall determine the head style, thread and point type to be used. These features are not structural properties of the screw.
- Screw Size: Figure 1.13 specifies the minimum size of screws to use.

- Penetration: All screws must extend through the steel a minimum of three (3) exposed threads.
- Edge Distance: The minimum distance from a screw to a free edge of the steel member shall be 1.5 screw diameters.
- Spacing: The minimum centre-to-centre spacing of screws shall be 2.5 screw diameters.
- Corrosion Resistance: All screws shall be coated with 0.008 mm (0.0003 in) of zinc, or another coating that provides equal or better corrosion protection.

Procedures for Screwed Connections

A variable speed (0-2500 rpm), reversible industrial strength screw gun equipped with a clutch assembly and a minimum 4.5 amp motor should be used for driving screws into steel framing. The gun should be run slowly to start the screw, then faster to finish. Once the screw goes through the steel sheets, the clutch should disengage so that the screw does not strip or break. If a screw is stripped, or continues to rotate, another screw must be installed. Pre-clamping members with locking C-clamps reduces the tendency of the framing elements to separate during screw installation. For best results use a screw gun that has a torque clutch that can be adjusted to the required setting.

Wood to Steel Connections

When connecting a wood subfloor to steel joists, #10 wafer head plymetal reamer self-drilling fasteners are suggested, although #8 bugle head screws are also often used. There are collated screws available for this purpose to use with screw guns that have extension handles to make the job easier. Space the screws at 152 mm (6 in) o.c. along the sheet edges and 305 mm (12 in) o.c. in the field. The minimum edge distance must be at least 10 mm (3/8 in). When fastening thicker wood members, refer to your fastener manufacturer for the proper fastener.

Ensure compatibility of fasteners with treated lumber. Contact screw manufacturer for details.

Adhesives are often used in addition to screws to attach the subfloor to the joists. The use of adhesives improves the stiffness of the structural system and prevents differential movement between the floor joists and the subfloor that might result in annoying squeaks later on.

Steel to Wood Connections

When connecting steel sections to wood sections, #10 wood screws are used. The screw threads need to penetrate at least 25 mm (1 in) into the wood to provide sufficient anchorage. It may be necessary to pre-drill clearance holes through thicker steel sections since the wood screws do not have a drill point.

Screwing Non-Loadbearing Framing

The standard fastener for interior non-loadbearing framing is the #6 x 11 mm (7/16 in) pan head sharp point screw. These screws are easily driven through the track and flanges of non-loadbearing steel studs with a cordless screwdriver. The pan head provides a finish suitable for drywall sheeting. Clinching can also be used for this type of framing.

Screwing Drywall

For steel thickness up to 0.879 mm (0.0346 in), drywall should be applied with a #6 x 31 mm (1-1/4 in) sharp point drywall screw. For heavier steel thickness, a drill point drywall screw is available .

Finish Work

An air nailer is most commonly used to fasten baseboards, mouldings, and other finish elements to steel framing. Finishing screws are also available.

Safety

Simple safety practices can eliminate most injuries and are an important aspect of daily work on a job site. Each province has their own health and safety act and this should be adhered to at all times. Working with steel presents specific health and safety risks that you should be aware of, some of these include:

- Steel becomes very slippery when wet or covered with ice.
- Steel exposed to sunlight or freezing temperatures may become extremely hot or cold to the touch.
- It is important to always remember that, unlike wood, steel conducts electricity. Always pay attention that steel members are not in contact with an electrical source in order to prevent the risk of electrocution.
- Joists are not stable until they have been properly braced by a subfloor. Similarly, workers should not stand on the top track of a steel wall. The steel track may deform under the weight of a person.

This is by no means a comprehensive list. Consult your local Ministry of Labour and inform yourself of all necessary precautions to protect yourself and others on site.

Design, Drawings, Permits and Cut Lists

There may be any number of details that must be designed by a design professional, and these must be included in the building permit application.

Once architectural drawings have been prepared they should be sent to the truss manufacturer, or to the design professional if they are designing the roof. Truss and roof drawings must also be part of the building permit application.

The builder must create a cut list from the plans, which lists all the members required for the job. Often, the manufacturer will help you with this task.

Getting Started Checklist			
		Y	N
Pre-Planning	Set up meeting with building official		
	Set up meeting with manufacturer		
	Set up meeting with designer		
	Set up meeting with electrical inspector		
Manufacturer	Cut list		
	Delivery Schedule		
	Accessories - clip angles, web stiffeners, strapping, blocking, fasteners, grommets, standoffs		
Trades	Qualify all trades for steel construction		
	Ensure proper layout for HVAC and plumbing stacks, toilet traps		